DTC	C1232/32	Stuck in Acceleration Sensor

DTC	C0371/71	Yaw Rate Sensor (Test Mode DTC)

DTC	C1234/34	Yaw Rate Sensor Malfunction

DTC	C1243/43	Acceleration Sensor Stuck Malfunction

DTC	C1244/44	Open or Short in Acceleration Sensor Circuit

DTC	C1245/45	Acceleration Sensor Output Malfunction

DTC	C1279/79	Acceleration Sensor Output Voltage Malfunction (Test Mode DTC)

DTC	C1381/97	Yaw Rate and / or Acceleration Sensor Power Supply Voltage Malfunction

DESCRIPTION

The yaw rate and acceleration sensors detect any gravity applied to the vehicle and transmit the signal to the skid control ECU via the CAN communication system.
DTCs C1279/79 and C0371/71 are output only in the test mode (SIGNAL CHECK).

DTC No.	DTC Detecting Condition	Trouble Area
C1232/32	While the vehicle is at a speed of 6 mph (10 km/h) or more, the fluctuation range of the signal from either GL1 or GL2 is under 80 mV and the other is above 1.9 V for 30 seconds or more.	• Yaw rate and acceleration sensor • Yaw rate and acceleration sensor circuit • CAN communication circuit
C1234/34	Sensor malfunction signal is received from yaw rate sensor.	• Yaw rate and acceleration sensor • Yaw rate and acceleration sensor circuit • CAN communication circuit
C1243/43	The following condition repeats 16 times. – GL1 and GL2 do not change by more than 2LSB when the vehicle decelerates from 19 mph (30 km/h) to 0 mph (0 km/h).	• Yaw rate and acceleration sensor • Yaw rate and acceleration sensor circuit • CAN communication circuit
C1244/44	When either of the following (a and b) is detected: (a) All the following conditions continue for at least 60 seconds. * Vehicle is stopped. * Difference between GL1 and GL2 does not drop below 0.4 G once it reaches 0.6 G or more. (b) Data malfunction signal is received from G sensor.	• Yaw rate and acceleration sensor • Yaw rate and acceleration sensor circuit • CAN communication circuit
C1245/45	The following condition continues for at least 60 seconds. – Difference between the values calculated from G sensor value and vehicle speed exceeds 0.35 G.	• Yaw rate and acceleration sensor • Yaw rate and acceleration sensor circuit • CAN communication circuit
C1381/97	G sensor power source malfunction signal is received for at least 10 sec. at a speed of more than 2 mph (3 km/h).	• Yaw rate and acceleration sensor • Yaw rate and acceleration sensor circuit • CAN communication circuit

cardiagn.com

WIRING DIAGRAM

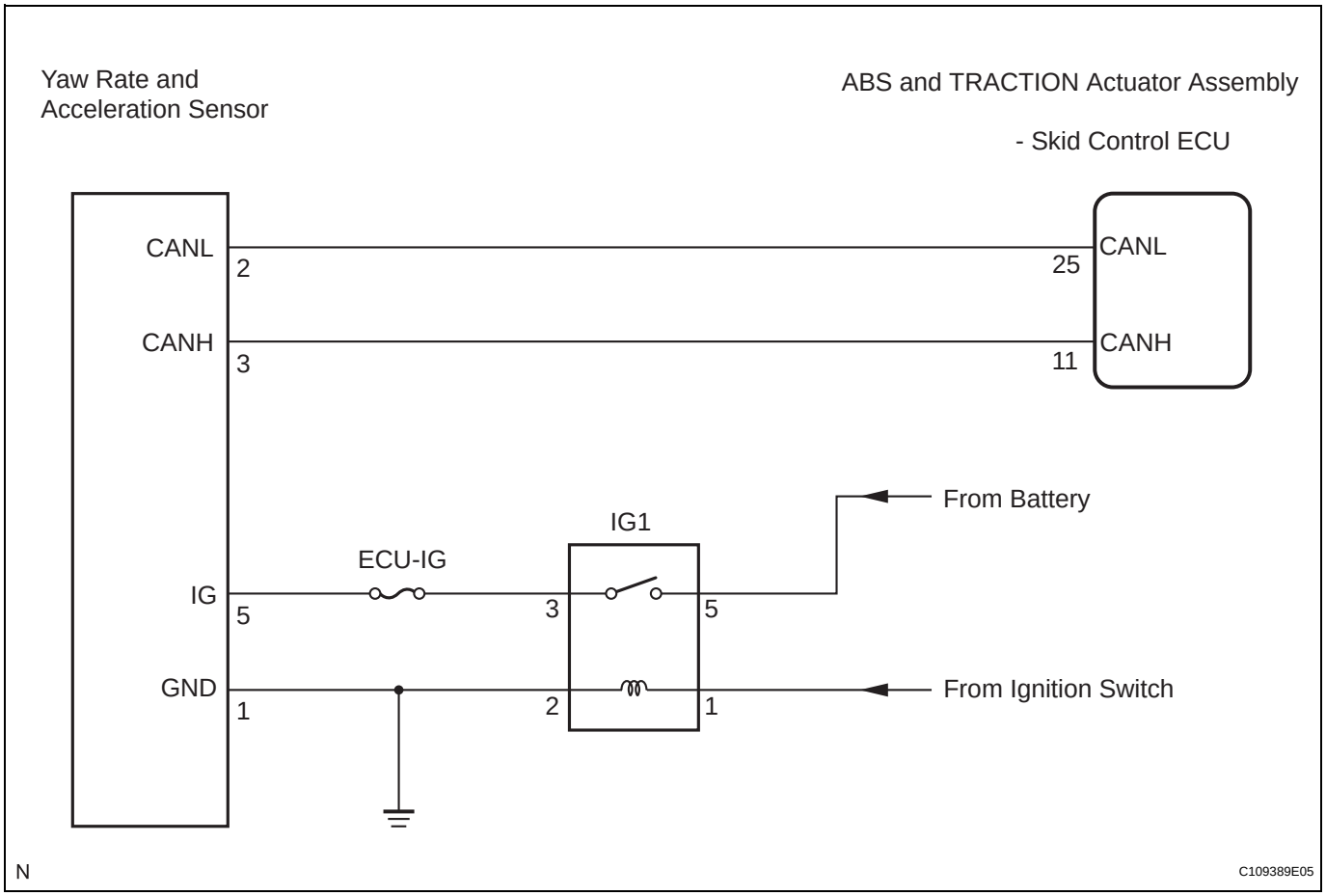

INSPECTION PROCEDURE

NOTICE:

When replacing the ABS and TRACTION actuator assembly and yaw rate and acceleration sensor, perform zero point calibration (See page BC-80).

HINT:

When U0073/94, U0123/62, U0124/95 or U0126/63 is output together with C1232/32 or C1334/34, inspect and repair the trouble areas indicated by U0073/94, U0123/62, U0124/95 or U0126/63 first.

1	CHECK YAW RATE SENSOR INSTALLATION

(a) Check that the yaw rate and acceleration sensor has been installed properly (See page BC-220).

OK:

The sensor should be tightened to the specified torque.

The sensor should not be tilted.

NG → **INSTALL YAW RATE SENSOR CORRECTLY**

OK

cardiagn.com

2 INSPECT YAW RATE SENSOR (IG TERMINAL)

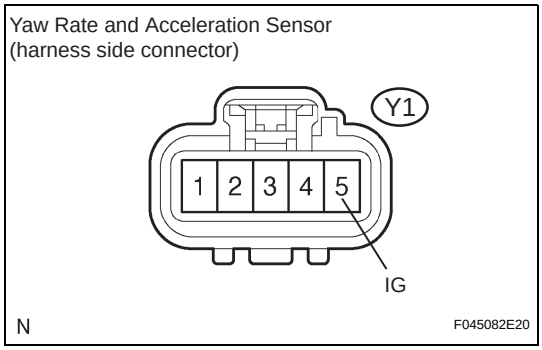

(a) Disconnect the yaw rate and acceleration sensor connector.
(b) Turn the ignition switch to the ON position.
(c) Measure the voltage according to the value(s) in the table below.

Standard voltage

Tester Connection	Condition	Specified Condition
Y1-5 (IG) - Body ground	IG switch ON	10 to 14 V

NG → **REPAIR OR REPLACE HARNESS OR CONNECTOR (IG CIRCUIT)**

OK

3 INSPECT YAW RATE SENSOR (GND TERMINAL)

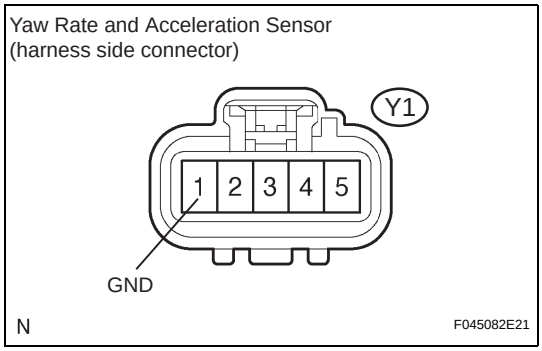

(a) Disconnect the yaw rate and acceleration sensor connector.
(b) Measure the resistance according to the value(s) in the table below.

Standard resistance

Tester Connection	Specified Condition
Y1-1 (GND) - Body ground	Below 1 Ω

NG → **REPAIR OR REPLACE HARNESS OR CONNECTOR (GND CIRCUIT)**

OK

4 CHECK DTC

(a) Check DTCs (See page BC-96).

Result

Condition	Proceed to
C1210/36, C1336/39 are output	A
C1210/36, C1336/39 are not output	B

B → **REPLACE ABS AND TRACTION ACTUATOR ASSEMBLY**

A

REPLACE YAW RATE SENSOR

cardiagn.com